Draw wire potentiometers

- Measuring strokes 1800 mm or 3600 mm
- 5 kOhm / 10 kOhm resistive type or with internal voltage / current conditioner circuit
- Easy mounting

Technical Specifications

Type of Measurement	Resistive types or with voltage / conditioner circuit
Linearity	0,5%, 0,1% or 0,05%
Measurement Stroke	1800 mm or 3600 mm
Output Signal Type	Voltage divider
Output Type	Resistive output, 0-10V or 0-20mA or 4-20mA
Supply Voltage	24V DC max. (for voltage output), 13-30V
Electrical Connections	2.5m Cable (Standard)
Case Material	Aluminium / Steel / ABS Plastic
IP Degree	IP 54
Operating Temperature	-20°C ... +80°C
Storage Temperature	-30°C ... +90°C

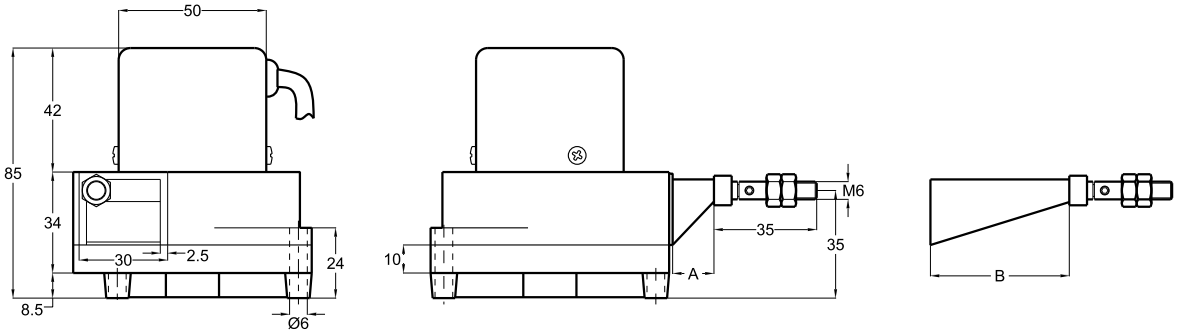

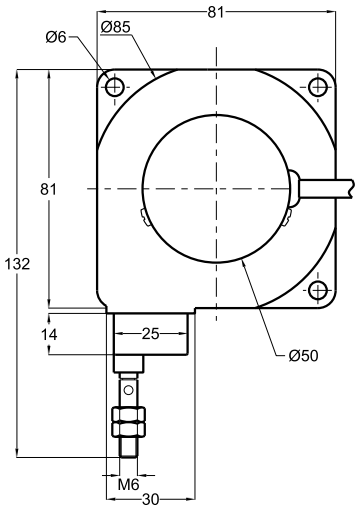

		Measurement Stroke
A	14 mm	1800 mm
B	50 mm	3600mm

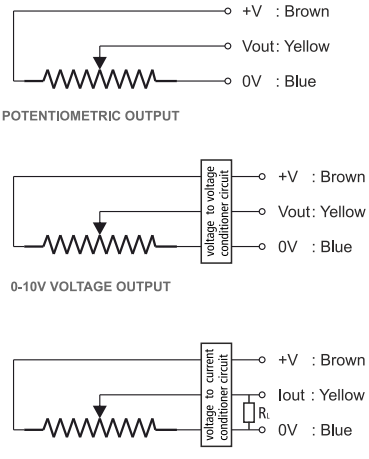

Model	Measurement Stroke	Linearity	Output	Connector / Cable	Cable Output
(example) DWP	1800	C	5K	2M5	R
DWP	900mm 1800mm 3600mm	C : 0,5% D : 0,1%	5K : 5Ω 10K : 10Ω V10 : 0-10V I 4 : 4-20mA I 20 : 0-20mA 20K : 3600	2M5 : 2,5 meter cable 5M : 5 meter cable 8M : 8 meter cable 10M : 10 meter cable	R : Radial