GRIPPER WITH TWO PARALLEL JAWS, SERIES P3

Parallel double-acting two-jaw gripper, with either internal or external clamping.
Aluminum alloy body coated with surface hardening treatment; jaws made of wear-resistant coated steel.
The jaw-guiding system and precision in coupling with the body make the gripper extremely stable.
The ceramic-coated body reduces friction and wear, and enhances the movement of the jaws on the body.
All sizes are available in the version with standard stroke and clamping force, while only some in the version with reduced stroke but with higher clamping torque.
The gripper is equipped with a magnet and grooves for sensors.
A version designed to house inductive sensors is also available (**the inductive sensors are not supplied by Metal Work**).
Pneumatic supply is available on both sides.

TECHNICAL DATA		P3-40	P3-64	P3-80		P3-100	
				Standard	Increased force	Standard	Increased force
Operating pressure	bar	2 to 8					
	MPa	0.2 to 0.8					
	psi	29 to 116					
Temperature range	°C	-10 to 80					
Fluid		20 µm filtered, lubricated or unlubricated air; lubrification if used, it must be continuous					
Clamping force of a single jaw at 6.3 bar, 20 mm from the upper surface, on opening and closing	N	75	125	265	445	360	790
Maximum movable weight	kg	0.65	1.3	2.5	5	3.5	7
Stroke of each jaw	mm	2.5	6	8	4	10	5
Minimum opening/closing time	s	0.05					
Repeatability	mm	0.01					
Moment of inertia as regards the piston axis	kg cm²	1.8	4	4.5		12	
Max. admissible static loads:							
- Fa	N	250	1100	1500		2000	
- Mx	Nm	10	40	90		80	
- My	Nm	5	60	55		115	
- Mz	Nm	12	40	55		70	
Weight	kg	0.12	0.35	0.5		0.9	

COMPONENTS

① BODY: hard-anodized aluminium
② JAWS: nitrided steel
③ PISTON ROD + GUIDE: nitrided steel
④ PISTON: hard-anodized aluminium
⑤ PISTON GASKET: NBR
⑥ PISTON ROD GASKET: NBR / polyurethane
⑦ BASE GASKET: reinforced SBR / NBR
⑧ MAGNET: neodymium

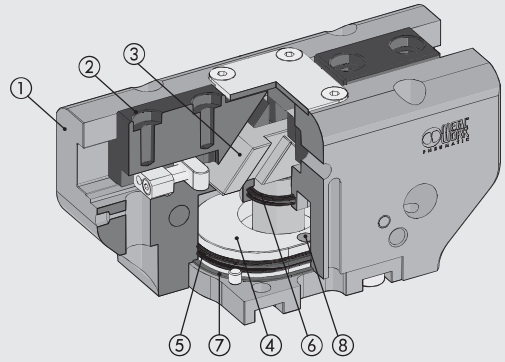

DIAGRAM OF FORCES AND MOMENTS

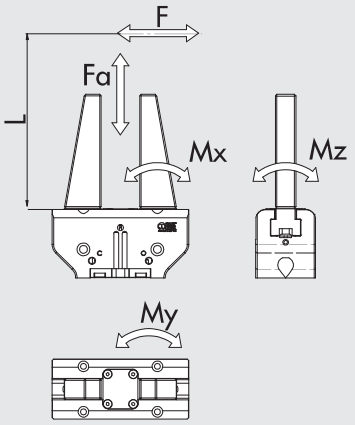

F	Clamping force for each jaw
Fa	Maximum static axial force
Mx, My, Mz	Maximum static moments

DIMENSIONS OF GRIPPER P3-40

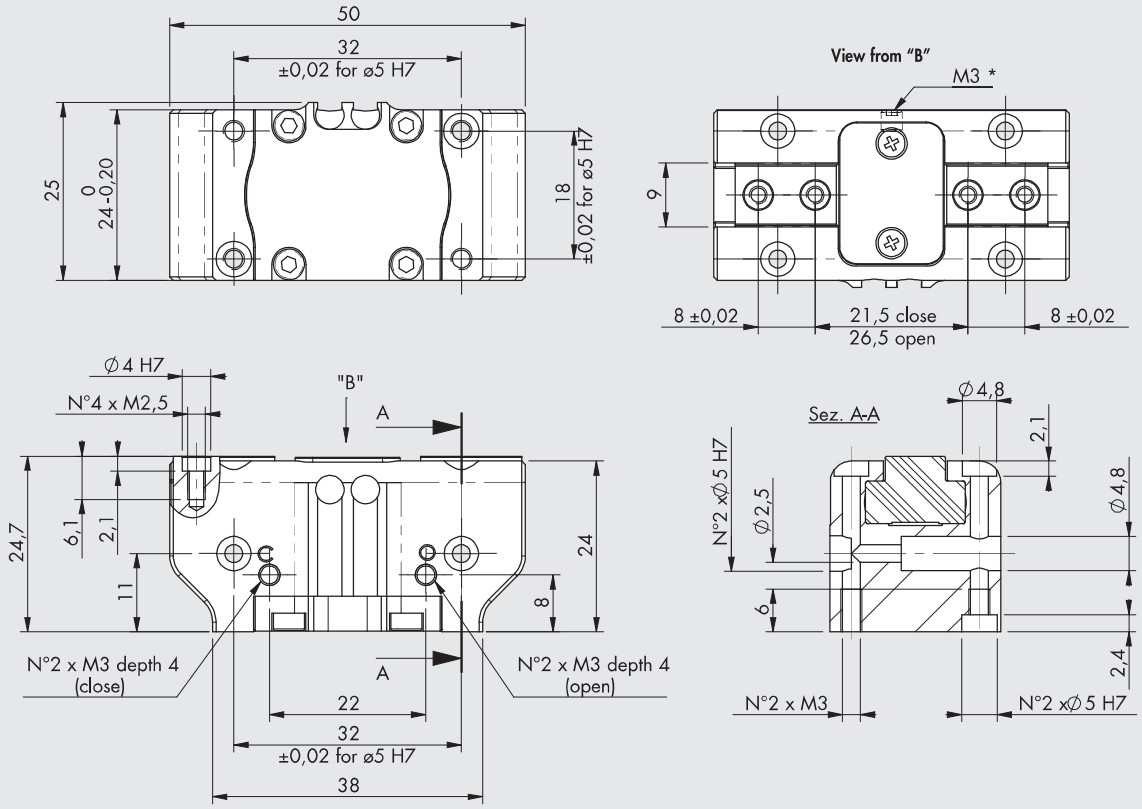

* Discharge pressurization connection

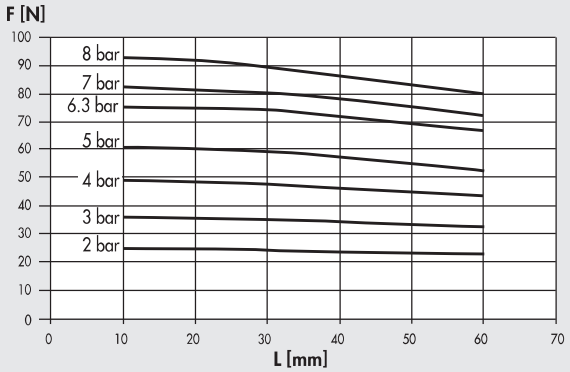

Code	Description
W1560400200	Gripper with 2 parallel jaws P3-40

DIMENSIONS OF GRIPPER P3-64

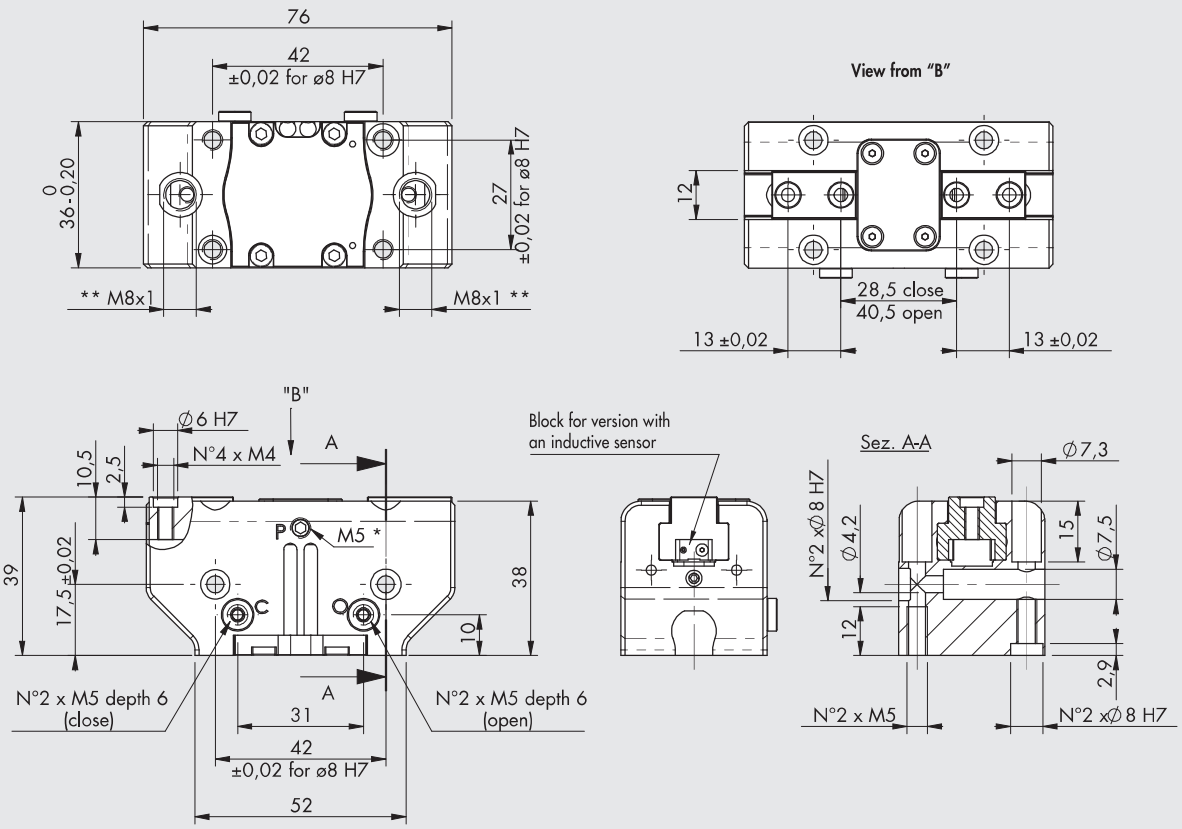

* Discharge pressurization connection, present on both sides
** Inductive sensor slot

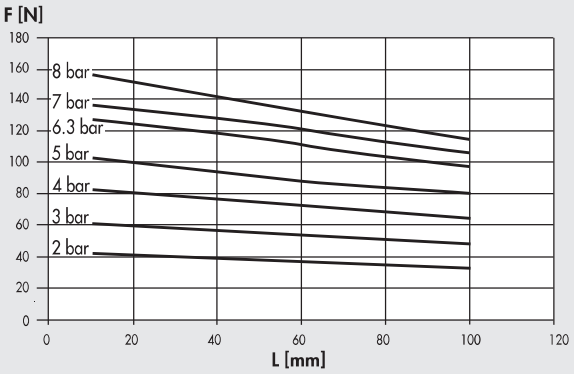

Code	Description
W1560640200	Gripper with 2 parallel jaws P3-64
W1560640201	Gripper with 2 parallel jaws P3-64 for inductive sensors

METAL WORK PNEUMATIC

DIMENSIONS OF GRIPPER P3-80

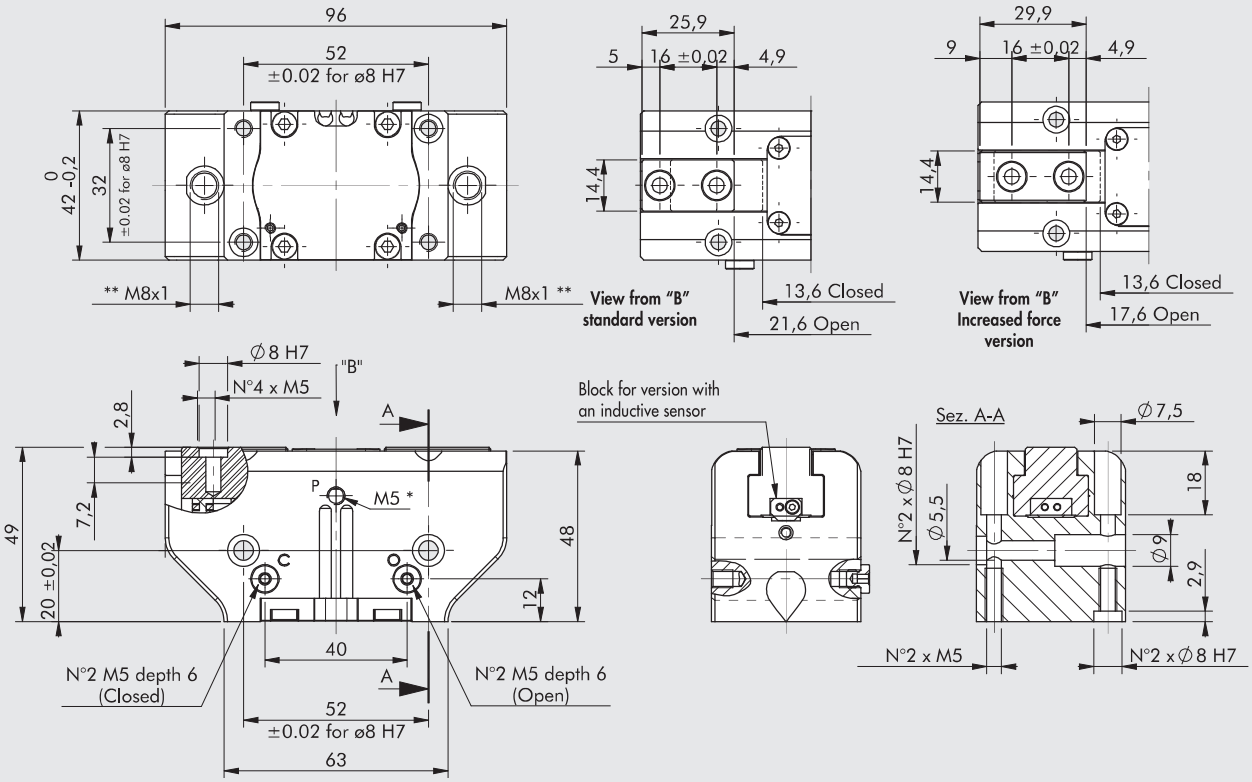

* Discharge pressurization connection, present on both sides
** Inductive sensor slot

Standard version

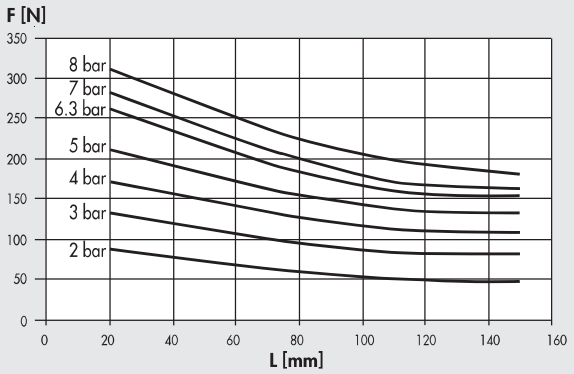

Increased force version

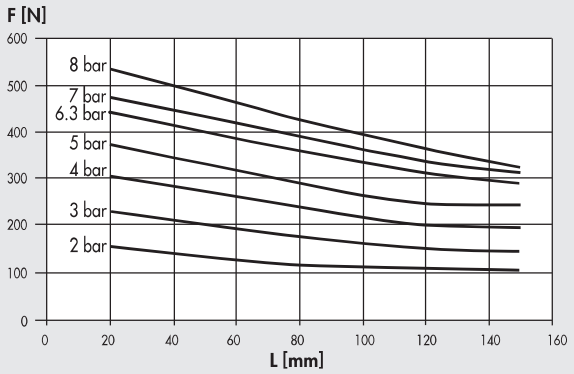

Code	Description
W1560800200	Gripper with 2 parallel jaws P3-80
W1560800201	Gripper with 2 parallel jaws P3-80 for inductive sensors
W1560800220	Gripper with 2 parallel jaws P3-80 increased force
W1560800221	Gripper with 2 parallel jaws P3-80 increased force for inductive sensors

DIMENSIONS OF GRIPPER P3-100

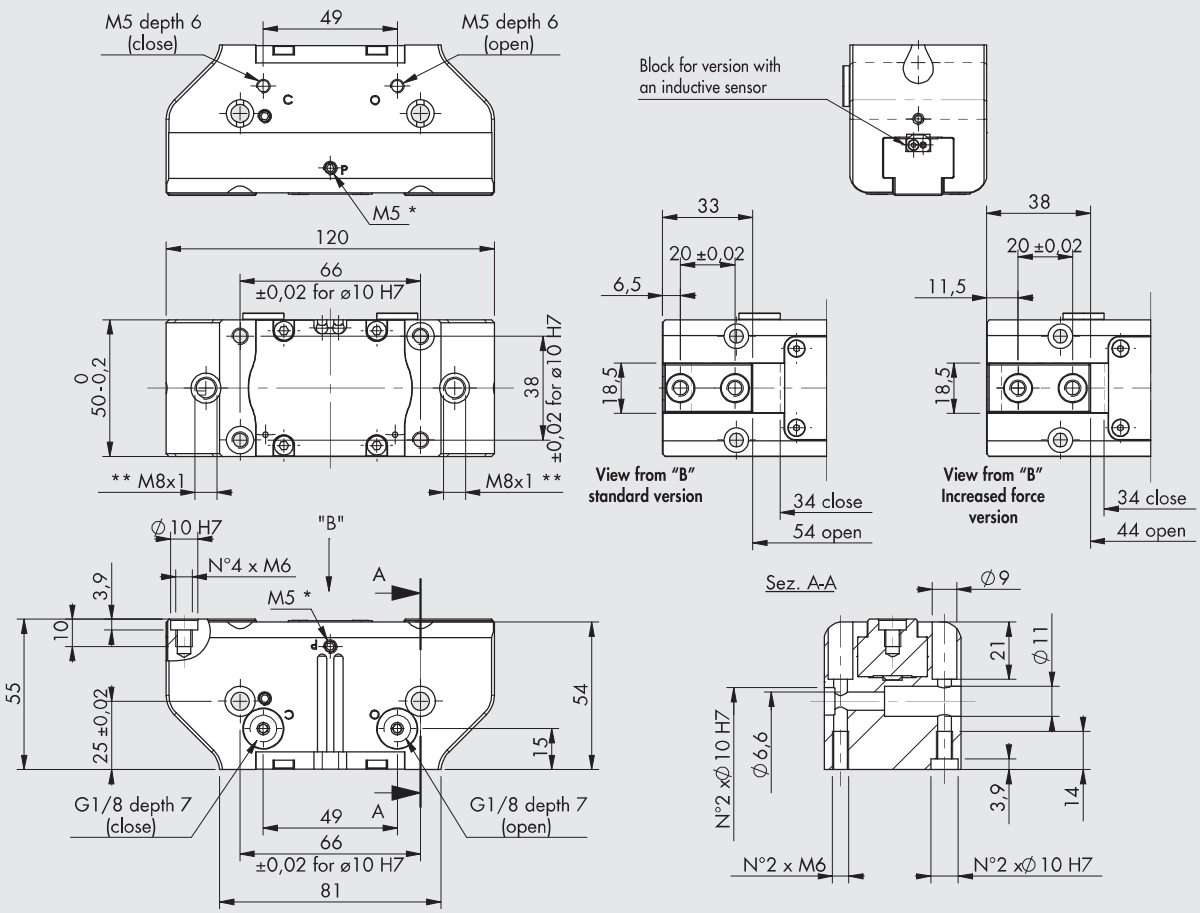

* Discharge pressurization connection, present on both sides
** Inductive sensor slot

Standard version

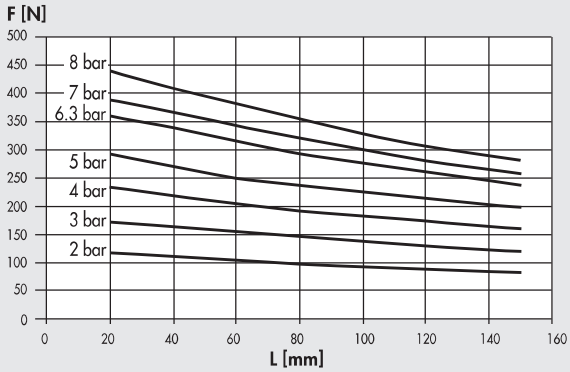

Increased force version

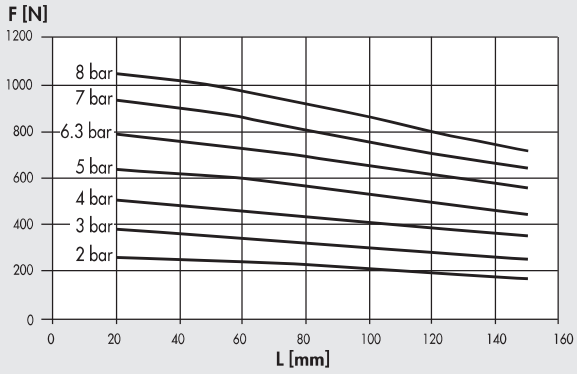

Code	Description
W1561000200	Gripper with 2 parallel jaws P3-100
W1561000201	Gripper with 2 parallel jaws P3-100 for inductive sensors
W1561000220	Gripper with 2 parallel jaws P3-100 increased force
W1561000221	Gripper with 2 parallel jaws P3-100 increased force for inductive sensors

ACCESSORIES

SENSOR Ø 4

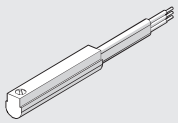

For codes and technical data, see **chapter A6**.

CENTRING RING

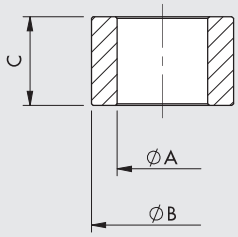

Code	Size	ØA	ØB f7	C
W1560409201	40	$3^{0}_{-0.1}$	4	$4^{0}_{-0.1}$
W1560649201	64	$4.5^{0}_{-0.1}$	6	$5^{0}_{-0.1}$
W1560809201	80	$5.1^{0}_{-0.1}$	8	$5^{0}_{-0.05}$
W1561009201	100	$6.2^{\pm 0.1}$	10	$6.9^{0}_{-0.1}$

Note: 2-pieces pack

NOTES