ROTARY ACTUATOR SERIES R2

Actuator with double rack and play take-up.
Four sizes – 12, 16, 20 and 25. Two angles of rotation – 90° and 180°. Stroke adjustment system for all sizes. Pneumatic cushioning for all sizes except the smallest. There are slots in the body to house a magnetic proximity sensor. Air supply, stroke adjustment and cushioning adjustment are all on the same side.

N.B.: We always suggest to use flow microregulators.
During the setup of the actuator, start with CLOSE flow microregulators, and open gradually till the achievment of the required speed.

TECHNICAL DATA		R2-12	R2-16	R2-20	R2-25
Operating pressure	bar	1.5 to 7			
	MPa	0.15 to 0.7			
	psi	22 to 101			
Temperature range	°C	-10 to +80			
Angle adjustment	degrees	35° (about +10° -25°)			
Fluid		20 µm filtered, lubricated or unlubricated air; lubrification if used, it must be continuous			
Versions		90°/180° rotation			
Ports		Both at the front			
Sizes	mm	12	16	20	25
Theoretical torque (ΔP= pressure in bar)	Nm	0.065 x P	0.11 x P	0.21 x P	0.48 x P
Max. axial load	N	8	14	40	80
Max. radial load	N	8	14	40	80
Weight with 90° rotation	kg	0.18	0.26	0.63	0.8
Weight with 180° rotation	kg	0.21	0.31	0.72	1
Rotation time without load:					
• 90° angle	s	0.2	0.2	0.2	0.2
• 180° angle	s	0.3	0.3	0.3	0.3

COMPONENTS

① ROTARY SHAFT / PINION: hardened and tempered steel
② BALL BEARING
③ FLANGE: anodized aluminium
④ PISTON / RACK: hardened and tempered steel
⑤ PISTON GASKET: NBR
⑥ GUIDE PAD: PTFE
⑦ MAGNET: neodymium
⑧ CUSHIONING GASKET: NBR
⑨ CUSHIONING PIN: zinc-plated steel
⑩ HEAD: anodized aluminium
⑪ PNEUMATIC CONNECTION / STROKE ADJUSTMENT: steel
⑫ BARREL: anodized aluminium
⑬ BASE: anodized aluminium
⑭ SEAL: NBR

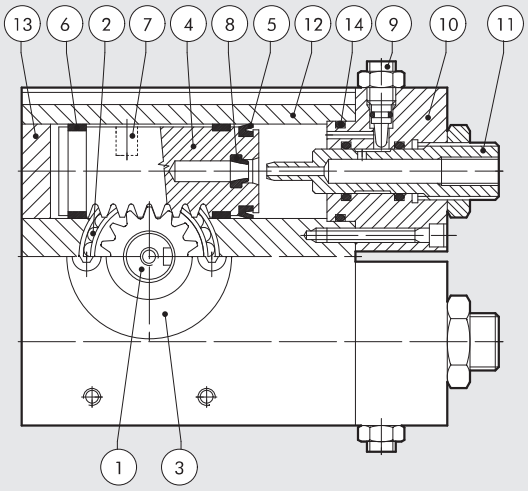

ROTARY ACTUATOR R2-12 90°/180°

Code	Description
W1620122090	Rotary actuator R2-12-90°
W1620122180	Rotary actuator R2-12-180°

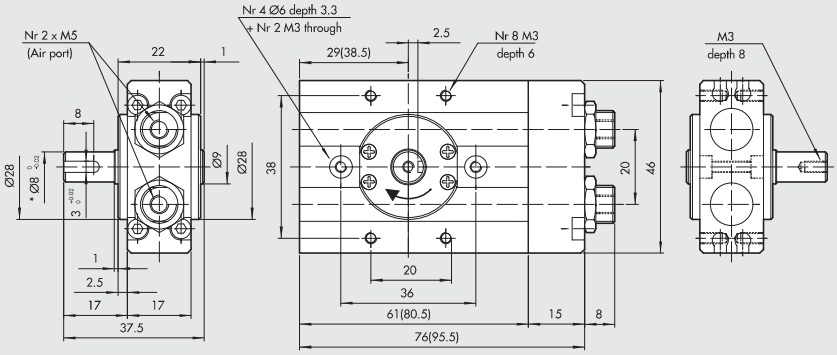

* For the version R2-12-90° it was Ø6 mm; spare actuators code W1620122091 can be still supplied
Dimensions for 180° rotation are given in brackets

ROTARY ACTUATOR R2-16 90°/180°

Code	Description
W1620162090	Rotary actuator R2-16-90°
W1620162180	Rotary actuator R2-16-180°

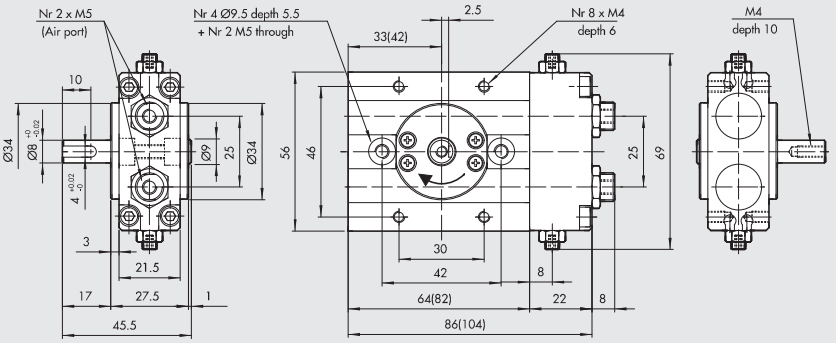

Dimensions for 180° rotation are given in brackets

ROTARY ACTUATOR R2-20 90°/180°

Code	Description
W1620202090	Rotary actuator R2-20-90°
W1620202180	Rotary actuator R2-20-180°

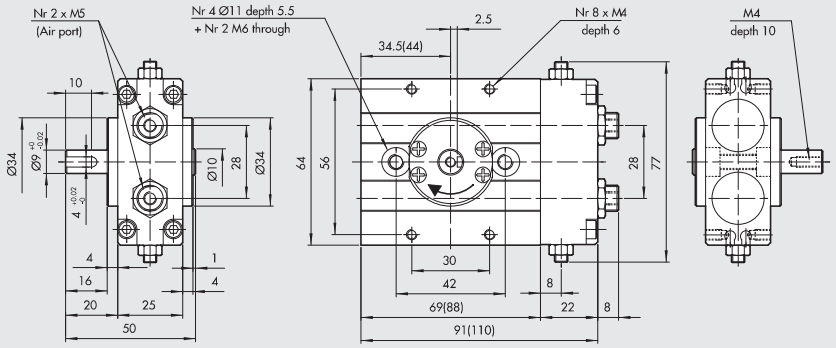

Dimensions for 180° rotation are given in brackets

ROTARY ACTUATOR R2-25 90°/180°

Code	Description
W1620252090	Rotary actuator R2-25-90°
W1620252180	Rotary actuator R2-25-180°

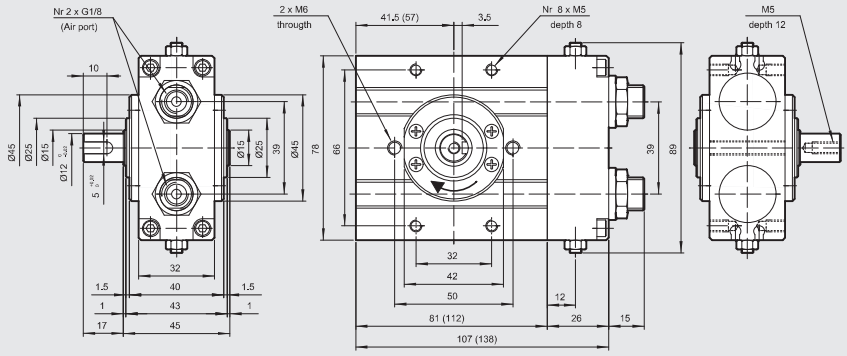

Dimensions for 180° rotation are given in brackets

ACCESSORIES

SENSOR Ø 4

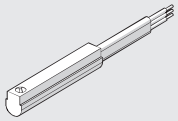

For codes and technical data, see **chapter A6**.

NOTES